THIS DRAWING IS THE SOLE PROPERTY OF TETLOW KILN & FURNACES PTY.LTD. AND IS RETURNABLE ON REQUEST. IT IS TO BE TREATED AS CONFIDENTIAL, AND NOT TO BE COPIED OR COMMUNICATED TO ANY OTHER PERSON WITHOUT THE WRITTEN CONSENT OF TETLOW KILN & FURNACES PTY.LTD. IT MAY ONLY BE USED FOR MANUFACTURE WHEN ACCOMPANIED BY A WRITTEN ORDER.

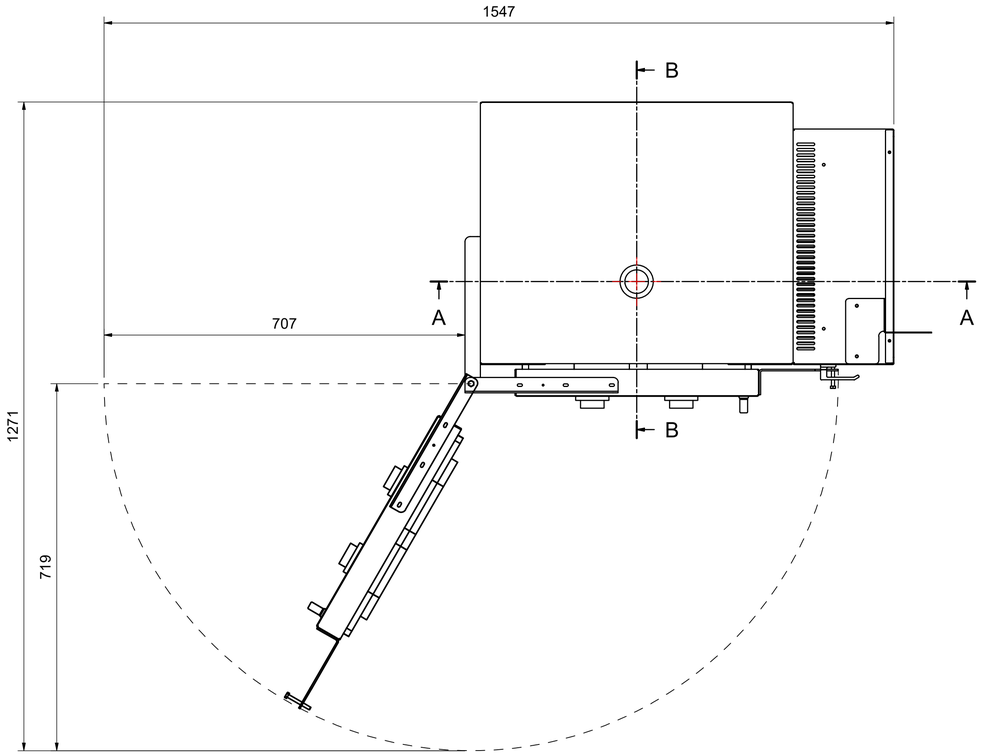

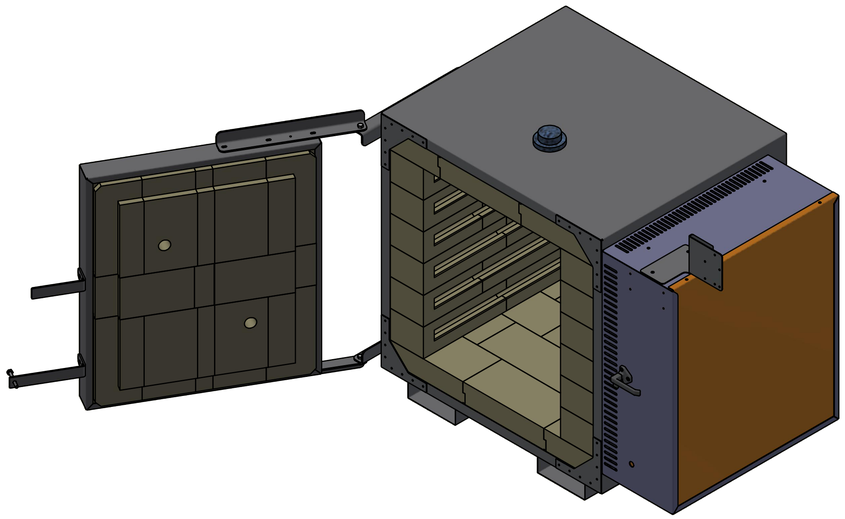

NOTES:
MODEL: K6 FL
INTERNAL DIMS: 380mmW x 380mmD x 456mmH
EXTERNAL DIMS: 840mmW x 609mmD x 687mmH
REFRACTORY: LBK 23 BRICKS
OUTER CASING: 304 STAINLESS STEEL
ELECTRICAL POWER
1 PHASE, 240V, 20amps, 4.8kW (MAX TEMP.: 1100°C)
1 PHASE, 240V, 25amps, 6.0kW (MAX TEMP.: 1280°C)
KILN PROGRAM
1 - PROGRAMMER FITTING
2 - SR 92
3 - STAFFORD
ADDITIONAL OPTIONS
1 - FLOOR MOUNT VENT SYSTEM
2 - STAND
3 - STAND WITH CASTOR WHEELS

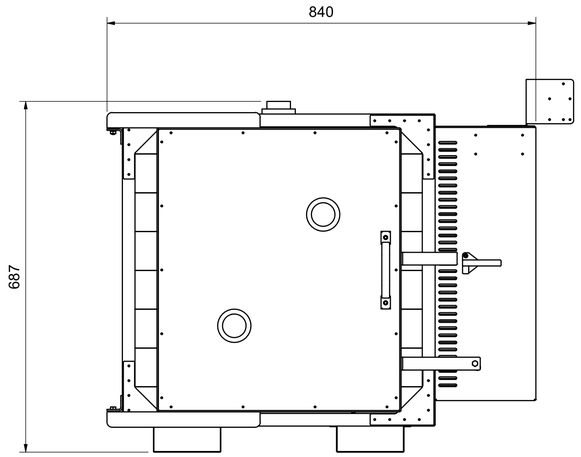

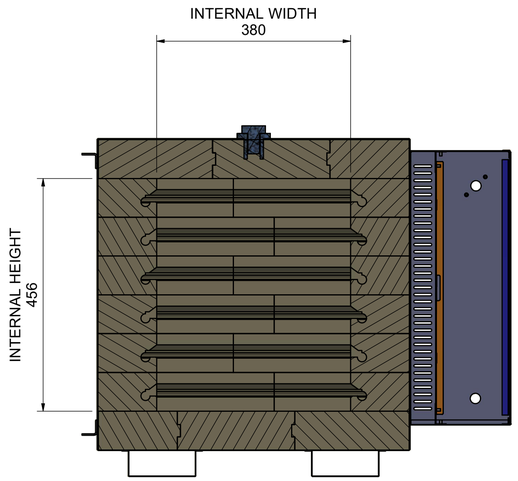

SECTION A-A
(1 : 6)

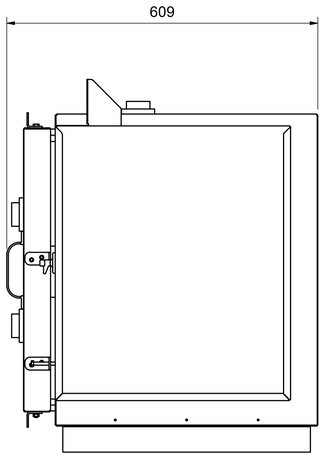

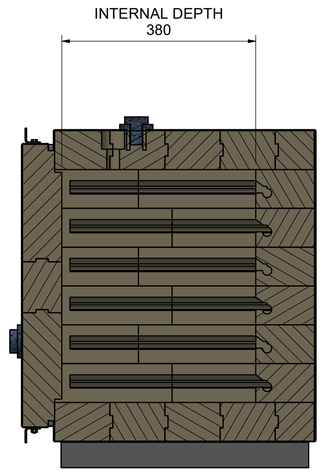

SECTION B-B
(1 : 6)

0
50
100

NO	DESCRIPTION	REV BY	DATE	APPR BY
A	INFORMATION ONLY - NOT FOR MANUFACTURE	Q.M.	20 MAR 26	D.M.

WELD NOTES
1. CARBON STEEL STRUCTURAL WELDING TO AS 1554.1 G.P. WITH 100% VISUAL EXAMINATION, 5% VISUAL INSPECTION U.N.O.
2. STAINLESS STEEL STRUCTURAL WELDING TO AS 1554.6 CATEGORY 2. CLASS C. SURFACE FINISH III WITH 100% VISUAL SCANNING, 5% VISUAL EXAMINATION U.N.O.
3. ALL WELDS TO BE CONTINUOUS 0.7 x MIN. PLATE THICKNESS U.N.O.
4. WELD DETAILS COVERED BY NOTES 1,2 & 3 ARE NOT SHOWN ON THE DRAWING
5. CARBON STEEL WELDING CONSUMABLES TO AS 1554.1 SECTION 2.3
6. STAINLESS STEEL WELDING CONSUMABLES TO AS 1554.6 SECTION 2.3
7. ELECTRODE SELECTION AS PER AS 1554.6 TABLE 4.5.1 U.N.O.

GENERAL NOTES
1. ALL ROLLED STEEL SECTIONS TO BE IN ACCORDANCE WITH AS3679.1-300 AND CURRENT BHP STRUCTURAL SHAPES
2. ALL RHS & CHS TO BE GRADE 350 TO AS1163
3. ALL BOLTS AND NUTS TO BE IN ACCORDANCE WITH AS1111,AS1112, AS1110,AS1252 UNLESS OTHERWISE NOTED.
4. DO NOT SCALE

TOLERANCES:
(UNLESS OTHERWISE SPECIFIED)
NON MACHINED SURFACES ±2
MACHINED SURFACES
ONE DECIMAL PLACE ±0.3
NO DECIMAL PLACE ±1
ANGLES & SQUARENESS ±0.5°

SURFACE FINISH

AS 1100	MAX. CLA	EQUIV
	NO. M/C	
	25um	
	1.6um	
	6.3um	
	1.6um	

NOT FOR MANUFACTURE - INFORMATION ONLY

THIRD ANG. PROJ.
AUST STD AS1100

INVENTOR

CAD FILE No. K6 FL 100 A.idw

Tetlow
TETLOW KILNS & FURNACES
A.B.N. 26 166 832 3000 54

A1

DESIGNED: C.H.
DRAWN: Q.M.
DATE: 20/03/2026
CHECKED: D.M.
APPROVED: T.N.
SCALE: 1:6

TITLE
K6 FL KILN
GENERAL ARRANGEMENT

CLIENT

DRG. NO. K6 FL 100
SHT. NO. 1 OF 1
REV A

©COPYRIGHT TETLOW KILNS & FURNACES 2026